DESIGN AND DEVELOPMENT OF A FLEXIBLE AND BIOCOMPATIBLE INFRARED LIGHT THERAPY BANDAGE FOR WOUND HEALING

A PROJECT REPORT

Submitted by

ATSU DOE ESTHER - ANU21370188

OTSYINA MAGDALENE - ANU24420386

OPPONG BOATENG JEFFERY - ANU24430382

In partial fulfillment of the award of the degree

Of

BACHELOR OF ENGINEERING

IN

BIOMEDICAL ENGINEERING

ALL NATIONS UNIVERSITY

SCHOOL OF BIOMEDICAL AND ALLIED HEALTH SCIENCES

DEPARTMENT OF BIOMEDICAL ENGINEERING

KOFORIDUA, GHANA

NOVEMBER,2025

DEDICATION

We dedicate this project to our beloved families and friends, whose constant love, patience, and encouragement have been our greatest source of motivation.

This work is also dedicated to all who continue to inspire us to learn, grow, and persevere in the face of challenges. Their belief in us has made this achievement possible.

ACKNOWLEDGMENTS

We express our profound gratitude to the Almighty God for His divine guidance, wisdom, and strength throughout the course of this project. His grace made it possible for us to complete this work successfully.

Our sincere appreciation goes to our supervisor, Dr. Eric Droepenu, for his invaluable guidance, encouragement, and constructive feedback throughout the design, development, and documentation phases of this project. His professional insight and patience greatly enriched the quality and direction of our work.

We are also deeply grateful to Dr. Mercy Adusei Boatemaa, the Head of the Department of Biomedical Engineering, All Nations University, for her continuous support and for providing an enabling academic environment that fostered innovation and teamwork.

Special thanks go to all faculty members of the School of Biomedical and Allied Health Sciences for their technical assistance and useful suggestions during the experimentation and testing stages.

We would also like to express our deepest gratitude to Bilkiss Mutalib and Josephine Owusu, whose unwavering support, availability, and guidance greatly assisted us throughout this project. Their commitment and willingness to help in diverse ways were truly invaluable.

Finally, we extend heartfelt appreciation to our families, friends, and colleagues for their moral support, understanding, and encouragement. Their belief in our capabilities inspired us to persevere and complete this work successfully.

TABLE OF CONTENT

DEDICATION ii

ACKNOWLEDGMENTS iii

TABLE OF CONTENT iv

LIST OF FIGURES vii

LIST OF TABLES viii

ABSTRACT ix

CHAPTER ONE 1

INTRODUCTION……...1

1.1 Background 1

1.2 Problem Statement 2

1.3 Justification 2

1.4 Aim and Objectives 3

1.4.2 Objectives 3

1.5 Significance of the Study 3

CHAPTER TWO 4

LITERATURE REVIEW……..4

2.0 Introduction 4

2.1 The Biological Stages of Wound Healing 4

2.2 Current Wound Dressing Technologies and Their Limitations 5

2.2.1 Traditional Dressings 5

2.2.2 Advanced and Smart Dressings and their Limitations 8

2.3 Photobiomodulation Therapy (PBMT) for Wound Healing 10

2.3.1 Mechanisms of Action: Cellular and Molecular Pathways of Infrared Light 10

2.4 Clinical Evidence and Efficacy of Infrared Light Therapy in Wound Healing 13

2.5 Optimal Wavelengths and Dosage Parameters for Therapeutic Outcomes 14

2.5.1. Optimal Wavelengths 15

2.5.2 Dosage and Power Density 16

2.6 Limitations of Existing Light Therapy Devices in Wound Care 17

2.7 Enabling Technologies for Flexible and Biocompatible Bandages 19

2.7.1 Biocompatible Materials for Skin-Contact Medical Devices 19

2.8 Advances in Flexible Light-Emitting Diodes (LEDs) and Optoelectronics for Wearable Applications 20

2.9 Flexible Power Sources and Human-Body Energy Harvesting for Wearables 21

2.10 Thermal Management Strategies in Flexible Wearable Electronics 22

2.10.1 Other strategies for thermal management in flexible electronics include: 23

2.11 FDA Regulatory Requirements and Biocompatibility Standards for Light-Emitting Medical Devices 23

2.11.1 FDA classification of medical devices 24

CHAPTER THREE 26

MATERIALS AND METHODS 26

3.0 Introduction 26

3.1 Materials 26

3.1.1 Components 28

3.2 Methods 34

3.2.1 Block Diagram 34

3.2.2 Circuit Diagram 35

3.2.3 Flowchart 37

CHAPTER FOUR 39

RESULTS AND DISCUSSIONS 39

4.0 Introduction 39
4.1 Temperature Response with Respect to Time 39
4.2 Irradiance Measurement 41
4.3 Thermal Stability and Safety Considerations 41
CHAPTER FIVE 47
CONCLUSION AND RECOMMENDATIONS 47
5.0 Introduction 47
5.1 Summary of Findings 47
5.2 Conclusion 48
5.3 Recommendations 48
REFERENCES 50

LIST OF FIGURES

Figure No.	Title	Page No.
Figure 2.1	Traditional treatment of a wound……	7
Figure 2.2	Advanced treatment of wounds using wearable electronic patch …...	9
Figure 2.3	Treatment of a wound using infrared light……..	13
Figure 2.4	Electromagnetic spectrum showing infrared radiation range ……	16
Figure 2.5	Traditional bandages ……	19
Figure 3.1	Printed Circuit Board (PCB) ……..	28
Figure 3.2	Dual MOSFET digital timer relay …….	28
Figure 3.3	Connecting wires……	29
Figure 3.4	Slide switch ……..	30
Figure 3.5	Non-latching switch …….	30
Figure 3.6	Lithium-ion battery……	31
Figure 3.7	Mini project box …….	31
Figure 3.8	Power port …….	32
Figure 3.9	Digital thermostat……..	32
Figure 3.10	Infrared LED light ……	33
Figure 3.11	Non-self-adhesive cotton medical elastic bandage ……	33
Figure 3.12	Block diagram of the infrared bandage …….	34
Figure 3.13	Circuit diagram of the infrared bandage…….	35
Figure 3.14	Flowchart of the infrared bandage…….	37
Figure 4.1	Graph of temperature variation with respect to time……	43
Figure 4.2	Testing of irradiance from the prototype……..	45
Figure 4.3	Schematic diagram of arrangement of IR LED lights on a 70 cm^2 bandage…….	46

LIST OF TABLES

Table	Title	Page
Table 1.0	Components, Specifications, Quantity, and Amount Used for the Infrared Light Therapy Bandage	27
Table 2.0	Temperature Variation with Respect to Time……	40

ABSTRACT

Wound healing continues to be a major clinical challenge, especially among patients suffering from chronic conditions such as diabetes or vascular insufficiency. This project focuses on the design, development, and performance evaluation of a flexible and biocompatible infrared (IR) light therapy bandage for wound healing applications. The device was engineered to deliver controlled infrared radiation to wound sites to enhance blood circulation, stimulate tissue repair, and accelerate the wound healing process. The system integrates low-level infrared LEDs onto a cotton-based substrate, powered by a compact lithium-ion battery and regulated by a digital thermostat and MOSFET timer relay for controlled light delivery and temperature management. Experimental testing revealed a gradual rise in temperature from 28.8 °C to 42.7 °C within 20 minutes, yielding a mean steady-state temperature of approximately 42.7 °C. This falls within the optimal therapeutic range (40–43 °C) known to enhance cellular activity and promote tissue repair for effective wound healing without causing thermal burns. The measured irradiance of 31 $\mu W/cm^2/nm$ produced a total radiant flux of approximately 2.17 mW/nm, falling within the clinically accepted photobiomodulation window. These results confirm that the prototype can deliver the thermal and optical energy required to promote cell proliferation, collagen synthesis, and improved microcirculation. The device's flexibility, comfort, and portability make it suitable for both clinical and home-based use, offering a cost-effective and non-invasive solution for managing chronic wounds. This work demonstrates how wearable infrared technology can bridge the gap between advanced wound care technology and patient accessibility.

Keywords: Wound healing, Low-Level Light Therapy (LLLT), Photobiomodulation, Irradiance, Biocompatibility, and Exudate.

CHAPTER ONE
INTRODUCTION

1.1 Background

Wound healing remains a significant challenge in healthcare, particularly when dealing with chronic and hard-to-heal wounds such as diabetic ulcers, pressure sores, and post-surgical lesions. Globally, chronic wounds affect millions of patients, leading to prolonged hospital stays, increased morbidity, and substantial healthcare costs **(Hoffmann, n.d.)**. The wound healing process is complex, involving multiple overlapping stages: hemostasis, inflammation, proliferation, and tissue remodeling. This delicate process can be disrupted by infections, vascular insufficiency, diabetes, and other pathological conditions **(Jangra *et al.*, 2025).** As a result, there is growing interest in innovative strategies that can accelerate healing and improve patient outcomes.

Infrared light therapy (IRT), a form of photobiomodulation (PBM), has emerged as a promising approach to support tissue repair. Infrared light, particularly in the near-infrared (NIR) range (700–1200 nm), penetrates deeper into biological tissues than visible light. It interacts with mitochondrial chromophores, especially cytochrome c oxidase, enhancing ATP production and modulating reactive oxygen species (ROS) **(Barolet, 2021).** These effects promote cell proliferation, angiogenesis, and anti-inflammatory responses—critical factors in the wound healing process.

Recent research shows that NIR light can accelerate wound closure, improve collagen synthesis, and enhance re-epithelialization in both acute and chronic wounds **(Glass *et al.*, 2025)**. Unlike many pharmacological treatments, infrared therapy is non-invasive, painless, and free from systemic side effects, making it an attractive option for wound care. Despite its potential, clinical adoption has been limited due to conventional infrared therapy devices being rigid, bulky, costly, and unsuitable for continuous or home-based use.

To address these limitations, researchers are now developing wearable, flexible phototherapeutic devices that integrate seamlessly into wound care routines.

Wearable light-emitting bandages, equipped with low-level infrared LEDs, provide localized therapy directly at the wound site, allowing continuous treatment without the need for constant clinical supervision **(Patel *et al.*, 2022)**.

These smart dressings combine the protective functions of traditional bandages with targeted therapeutic benefits, all in a compact format **(Moradifar *et al.*, 2025)**.

The aim of this project is to design and develop a flexible and biocompatible Infrared Light Therapy Bandage for wound healing through integrated low-level infrared light delivery. The proposed system will feature flexible circuitry, integrated infrared LEDs onto a biocompatible dressing matrix, and a portable power source for on-demand use. Key objectives include optimizing IR wavelength and dosage, ensuring patient safety through thermal regulation, and determining the device's theoretical effectiveness in promoting wound repair. By integrating phototherapy into a wearable format, this work seeks to overcome the limitations of existing wound healing technologies and provide a practical solution for managing chronic wounds.

1.2 Problem Statement

Chronic and hard-to-heal wounds are a significant healthcare challenge in Ghana, particularly among patients with conditions such as diabetes, vascular problems, or infections. These wounds often fail to heal normally, causing prolonged suffering, pain, and severe complications, including amputations. Current wound care approaches either offer limited active support or may not be accessible to all patients. Advanced therapies, such as infrared light therapies, are largely unavailable due to device limitations such as rigidity and bulkiness, making effective, continuous treatment difficult and leaving a gap in wound management.

1.3 Justification

The development of a flexible and biocompatible infrared light therapy bandage is necessary to address the limitations of existing wound care and PBMT devices. Chronic wounds affect approximately 2.21 per 1000 people globally, contributing significantly to reduced quality of life, loss of function, and substantial healthcare costs. These wounds are often painful, prone to

recurrent infections, and can lead to severe complications such as amputation or even death if not effectively managed **(Kaiser *et al*., 2021)**.

The integration of flexible LEDs and sophisticated control systems will allow for precise light delivery, adapting to the dynamic stages of wound healing and optimizing therapeutic outcomes.

1.4 Aim and Objectives

1.4.1 Aim:

To design and develop a flexible and biocompatible infrared light therapy bandage for wound healing.

1.4.2 Objectives

i. To design and develop a battery-operated, flexible, and biocompatible infrared light therapy bandage.
ii. To integrate optimized low-level infrared light and biocompatible materials to ensure effective wound healing.
iii. To determine the theoretical effectiveness of the bandage in promoting wound healing based on its measured irradiance values and comparison with literature-supported therapeutic ranges.

1.5 Significance of the Study

This study addresses the critical challenge of managing chronic and hard-to-heal wounds in a practical, patient-centered way. By developing a flexible, wearable infrared light therapy bandage, the project offers a non-invasive solution that can accelerate wound healing, lead to a reduction in pain, and lower the risk of complications such as infections or amputations.

The bandage's portability and adaptability make it suitable for both clinical and home-based care, increasing patient access to continuous therapy. Its design prioritizes safety, comfort, and effectiveness, which could improve treatment adherence and outcomes. Ultimately, this study has the potential to advance wound care practices in Ghana, reduce healthcare costs, and enhance the quality of life for patients suffering from chronic wounds.

CHAPTER TWO
LITERATURE REVIEW

2.0 Introduction

This chapter reviews existing studies on wound healing and the use of infrared light therapy. It outlines the healing process, explains how infrared radiation aids in tissue repair, and examines related devices and design considerations relevant to this project.

2.1 The Biological Stages of Wound Healing

Wound healing is a well-coordinated biological process, essential for restoring tissue integrity after injury. This dynamic process is typically categorized into four overlapping stages:

1. Hemostasis (Blood Clotting)

This is the first stage of wound healing. Immediately after injury, platelets aggregate at the wound site, forming a fibrin clot that stops bleeding. This clot also serves as a temporary scaffold for incoming cells and releases growth factors, such as platelet-derived growth factor (PDGF) and vascular endothelial growth factor (VEGF), which initiate the repair process **(Mieczkowski *et al.*, 2022)**.

2. Inflammatory Response

Blood flow increases to deliver oxygen, nutrients, and immune cells, primarily macrophages and neutrophils, to the wound site. These cells clear debris and pathogens while releasing cytokines and chemical mediators that signal the next phase of repair. This phase acts as the body's "alarm system," initiating wound debridement and preparing the tissue for regeneration. Adequate oxygenation during this phase is crucial for efficient immune function and prevention of infection **(Jangra *et al.*, 2025)**.

3. Cell Proliferation and Collagen Production

In this reparative phase, fibroblasts proliferate and synthesize extracellular matrix components, especially collagen, which forms the structural framework for new tissue. Endothelial cells stimulate angiogenesis, forming new blood vessels to supply nutrients and oxygen. Keratinocytes migrate to cover the wound during re-epithelialization,

restoring the skin barrier. Growth factors such as transforming growth factor-beta (TGF-β) and fibroblast growth factor (FGF) play key roles in coordinating cell proliferation and matrix formation **(Teixeira *et al.*, 2020)**.

4. Remodeling

The final phase involves maturation and reorganization of newly formed tissue. Collagen fibers cross-link, improving tensile strength, while the wound contracts, reducing its size. Over time, scar tissue forms, restoring structural integrity but with some differences from normal skin in elasticity and appearance **(Teixeira *et al.*, 2020)**.

Disruption at any stage such as prolonged inflammation, insufficient angiogenesis, or poor collagen deposition can lead to chronic, non-healing wounds **(Mieczkowski *et al.*, 2022)**.

Photobiomodulation therapy (PBMT) has been shown to accelerate the transition from the inflammatory to proliferative phase. By triggering early inflammatory signals while mitigating prolonged inflammation and enhancing cell proliferation, collagen synthesis, and angiogenesis, PBMT creates an optimal microenvironment for faster healing. A responsive, wearable bandage capable of monitoring wound status and adjusting light delivery could target specific healing stages, transforming therapy from a static application to an adaptive, precision treatment **(Jangra *et al.*, 2025; Teixeira *et al.*, 2020).**

2.2 Current Wound Dressing Technologies and Their Limitations

Wound care has evolved through a range of dressing technologies, each designed to support healing in different ways. These can be broadly categorized into **traditional dressings** and **advanced dressings**. Each has its specific advantages and limitations:

2.2.1 Traditional Dressings

Traditional dressings are widely used due to their availability and low cost, but they primarily offer passive protection rather than actively promoting healing:

1. Gauze Dressings:

Gauze is widely used because it is simple, inexpensive, and accessible. It protects wounds and can assist in mechanical debridement when moistened. However, it dries out easily, may stick to the wound, offers no active therapeutic benefits, and requires frequent changes, which can slow healing and cause discomfort. Its limitations highlight the need for more advanced, healing-promoting dressings **(Mbese *et al*., 2021)**.

2. Film Dressings:

Thin, flexible, and transparent, film dressings retain moisture and allow visual monitoring of the wound while preventing bacterial entry. However, they are non-absorbent and can cause maceration in wounds with moderate to heavy exudate **(Gusano, 2024)**.

3. Foams Dressings:

Foam dressings absorb exudate and provide cushioning against trauma. They block direct wound visualization and may dry out wounds with minimal exudate. Their stiffness and absorption capacity depend on the materials used **(Patel *et al.*, 2022)**.

4. Hydrogel Dressings:

Hydrogels maintain a moist environment, provide a cooling effect, and support autolytic debridement. Their low absorptive capacity and need for secondary dressings limit their use in heavily exuding wounds **(Moradifar *et al.*, 2025)**.

5. Hydrocolloid Dressings:

These dressings form a gel upon fluid absorption and help lower wound pH to inhibit bacterial growth. The main limitation is that the wound cannot be directly monitored once applied **(Mbese *et al.*, 2021)**.

6. Alginate Dressings:

Derived from seaweed, alginate dressings are highly absorbent and suitable for moderate to heavy exudative wounds. They may stick to the wound, produce odor, and require secondary dressings **(Gusano, 2024)**.

7. Antimicrobial Dressings (e.g., silver, iodine):

These provide broad-spectrum antimicrobial activity, but silver may stain skin, and iodine may have systemic effects if used long-term. Nanoparticle-based options are promising but may impact beneficial bacteria and carry potential toxicity **(Patel et al., 2022).**

Figure 2.1: An image of traditional treatment of a wound **(Teixeira *et al.*, 2020)**.

Figure 2.1 *shows a traditional approach to wound care, with a gauze bandage applied to an injured hand. This highlights the fundamental role of basic dressings in clinical practice, emphasizing simplicity, accessibility, and patient-centered care. While gauze provides essential protection, it lacks active therapeutic features. In the context of developing infrared light therapy bandages, this figure serves as a reference point, illustrating how modern technologies can build on traditional methods to enhance healing, provide antimicrobial benefits, and deliver targeted tissue stimulation.*

2.2.2 Advanced and Smart Dressings and their Limitations

The integration of microelectronics has led to the emergence of "smart wound dressings" capable of monitoring wound indicators and administering therapeutic agents. While representing significant progress, these advanced solutions face several critical limitations:

1. **Inability to Inhibit Bacterial Growth:** While moisturizing dressings provide a moist environment, they are often insufficient to control bacterial proliferation, which may lead to chronic or non-healing wounds without more active antimicrobial strategies **(Teixeira *et al.*, 2020; Kaiser *et al.*, 2021).**
2. **Cost and Scalability:** The integration of nanomaterials and microelectronics significantly raises production costs and creates challenges for large-scale manufacturing, limiting widespread adoption of smart wound dressings **(Patel *et al.*, 2022; Moradifar *et al.*, 2025)**.
3. **Sensor Integration and Clinical Translatability:** Although sensors for pH, metabolites, or oxygen levels can be embedded into dressings, problems such as biofouling, instability, and long-term biocompatibility hinder their effective clinical translation **(Ghosh *et al.*, 2023; Haba *et al.*, 2024a).**
4. **Privacy and Trust Issues:** Patients often express concerns regarding data security, trust in device reliability, and ethical considerations, which may reduce acceptance and adherence to smart wound technologies **(Patel *et al.*, 2022)**.
5. **Lab-to-Clinic Gap:** Many promising prototypes remain confined to laboratory studies. Transitioning to clinical application requires extensive trials to establish safety, reproducibility, and efficacy, which delays adoption into routine practice **(Crema *et al.*, 2021; Moradifar *et al.*, 2025).**
6. **Material Toxicity:** Stimuli-responsive antimicrobial dressings often rely on inorganic or synthetic nanomaterials that may introduce toxic effects. Careful tailoring and safety assessments are required before these materials can be used in patients **(Rajendran *et al.*, 2019; Haba *et al.*, 2024a).**

Current wound dressings, even those considered advanced, primarily function as passive or reactive barriers, managing symptoms such as moisture balance, exudate, and infection. While these functions are indispensable, they do not actively stimulate the intrinsic biological processes of healing or adapt to the dynamic changes within a wound. The emergence of "smart wound dressings," which integrate microelectronics for monitoring and drug delivery, signifies a recognition of the need for active, responsive intervention. However, these nascent technologies face substantial hurdles in terms of scalability, manufacturing cost, seamless sensor integration, and successful clinical translation. The proposed infrared light therapy bandage represents a logical progression in this therapeutic landscape. It aims to combine the active therapeutic potential of PBMT with the intelligent capabilities inherent in wearable electronics. This approach seeks to overcome the limitations of both traditional dressings (their inherent passivity) and the practical challenges faced by current smart dressings (cost, full integration, and widespread adoption). The challenge, therefore, extends beyond merely demonstrating efficacy to developing a solution that is practical, affordable, and widely accessible, thereby bridging the critical gap between laboratory innovation and routine clinical application.

Figure 2.2: An image showing advanced treatment of wounds **(Rajendran *et al.*, 2019)**.

Figure 2.2 *shows a modern wearable electronic patch with embedded blue LEDs wrapped around the arm, illustrating advancements in smart bandages that use light-based therapy. Its flexible, transparent design emphasizes comfort and adaptability, while demonstrating how light-emitting components can be integrated into soft substrates to stimulate healing and reduce microbial load. This figure highlights the shift from passive wound coverings to active, responsive platforms for wound care.*

2.3 Photobiomodulation Therapy (PBMT) for Wound Healing

Photobiomodulation Therapy (PBMT), also known as low-level light therapy, is a non-invasive technique that uses specific wavelengths of visible and near-infrared light to stimulate the body's natural healing processes. When light penetrates the skin, it is absorbed by cellular structures, particularly the mitochondria, which are responsible for producing energy in the form of ATP. This light absorption enhances cellular metabolism, increases energy production, and promotes a series of biological effects that directly benefit wound healing **(Yun Lee *et al.*, 2022)**.

Clinical studies report that PBMT can be effective in managing chronic wounds such as diabetic ulcers, pressure sores, and post-surgical injuries, which often fail to progress through the normal stages of healing **(Rajendran *et al.*, 2019; Crema *et al.*, 2021)**. Unlike traditional treatments, PBMT provides an active, targeted intervention that works with the body's natural biology rather than relying on drugs or invasive procedures.

However, the success of PBMT depends on carefully controlled parameters, including wavelength, dosage, and exposure time. Too little light has no effect, while excessive exposure may slow healing or damage tissue. This highlights the need for precise delivery systems, such as wearable infrared bandages, that can provide consistent, safe, and adjustable therapy tailored to the patient's wound condition.

2.3.1 Mechanisms of Action: Cellular and Molecular Pathways of Infrared Light

Photobiomodulation Therapy (PBMT) leverages low-energy light to elicit beneficial biological responses at the cellular and molecular levels. The fundamental mechanism involves the

absorption of specific wavelengths of light by endogenous molecular photo-acceptors within tissues. A key photo-acceptor, particularly for light in the infrared range, is cytochrome c oxidase (CcO), an enzyme located within the mitochondria. The absorption spectra of CcO closely align with the action spectra observed for various biological responses to light, underscoring its pivotal role **(Dompe *et al.*, 2020)**.

This photoactivation of CcO and other mitochondrial components initiates a cascade of intracellular events:

One of the most critical outcomes is the increase in ATP production, as enhanced mitochondrial activity boosts the availability of cellular energy. This rise in ATP is essential for powering fundamental processes such as metabolism, proliferation, and migration, all of which are indispensable for efficient wound healing.

Another important mechanism involves the modulation of redox status and reactive oxygen species (ROS). Light absorption alters mitochondrial redox balance, influencing ROS generation. While some studies report that PBMT activates NF-κB through ROS production during the early stages of repair, other findings suggest that specific wavelengths can reduce ROS release, thereby minimizing prolonged or damaging inflammation **(Rajendran *et al.*, 2019)**. This indicates that PBMT does not simply suppress inflammation but rather fine-tunes the response, ensuring it remains beneficial for tissue recovery.

PBMT also contributes to the activation of cellular signaling pathways, including NF-κB, which regulates inflammatory cascades and cellular stress responses **(Rajendran *et al.*, 2019)**. These pathways help orchestrate cellular behavior in a way that supports repair and regeneration.

In addition, PBMT has a direct impact on cell proliferation and migration, particularly of fibroblasts, which synthesize collagen and extracellular matrix to form the structural framework of new tissue. It also stimulates the mobilization of these cells to the wound site, thereby accelerating closure. Evidence further suggests that PBMT enhances stem cell activity and supports nerve regeneration, contributing to broader tissue restoration **(Doulgkeroglou *et al.*, 2020).**

Another mechanism is vasodilation, where red light induces the widening of blood vessels, increasing circulation at the wound site. This improved blood flow ensures more effective delivery of oxygen, nutrients, and immune cells, all of which are essential for infection control and tissue repair.

Finally, PBMT exerts notable anti-inflammatory effects. For example, studies on diabetic models have shown that specific laser treatments reduce the expression of matrix metalloproteinases (MMP-2 and MMP-9), enzymes that are typically elevated in chronic wounds and associated with poor healing outcomes **(Jere *et al.*, 2018)**. By normalizing these factors, PBMT helps restore a balanced environment conducive to tissue repair.

Together, these mechanisms illustrate how PBMT not only boosts cellular energy but also fine-tunes inflammation promotes vascularization, and drives tissue regeneration, making it a powerful tool for accelerating wound healing.

The observed dual role of PBMT in modulating inflammation, where it appears to both activate NF-κB via Reactive Oxygen Species (ROS) generation in early stages and subsequently deactivate pro-inflammatory responses like TNFα and NF-κB by decreasing ROS later, highlights a nuanced and sophisticated regulatory capacity **(Dompe *et al.*, 2020)**. This seemingly contradictory effect can be understood through the temporal requirements of wound healing: initial, controlled inflammation is essential for debridement and signaling, whereas prolonged inflammation impedes healing. PBMT's ability to potentially initiate the necessary early inflammatory signals while actively contributing to the resolution or minimization of chronic inflammatory responses suggests a precise, time-dependent influence. This complex regulatory function underscores the critical importance of precise control over wavelength, dosage, and treatment duration. A smart bandage that could dynamically adjust its light parameters based on real-time inflammatory markers or the specific phase of wound healing could optimize this delicate biological balance, maximizing therapeutic efficacy and minimizing adverse outcomes. Such a dynamic delivery system necessitates further research into adaptive light delivery protocols.

Figure 2.3: An image showing the treatment of a wound using infrared light **(Dompe *et al.*, 2020)**.

Figure 2.3 *depicts the use of laser therapy on a patient's heel, demonstrating a clinical application of light-based treatment for pain relief and tissue repair. The image emphasizes the precision and targeted action of laser devices, which are widely used in dermatology and podiatry. In relation to infrared bandage design, it highlights the therapeutic value of controlled light energy in promoting wound healing by enhancing cellular regeneration, reducing inflammation, and improving circulation.*

2.4 Clinical Evidence and Efficacy of Infrared Light Therapy in Wound Healing

The therapeutic potential of red and infrared light therapy in clinical wound care has been supported by numerous studies, which consistently report beneficial effects on tissue repair. Early investigations demonstrated that PBMT could **accelerate wound closure and improve scar outcomes**. For instance, in patients undergoing blepharoplasty, red-light treatment was found to halve healing time compared to untreated areas within the same patient, an effect particularly significant during the early phases of repair **(Crema *et al.*, 2021)**.

PBMT has shown particular promise for hard-to-heal wounds, which often resist conventional therapies. A pilot study applying an accelerated PBMT protocol with blue light (400–430 nm) in

patients with chronic wounds reported a mean wound area reduction of 40.5% at 12 weeks, alongside improvements in pain, exudate, and peri-wound skin condition **(Crema *et al.*, 2021)**. Similarly, in diabetic wounds, which pose significant healing challenges, PBMT has been demonstrated to enhance fibroblast migration, viability, proliferation, and collagen deposition while reducing oxidative stress. An 810 nm infrared laser restored healing capacity in diabetic wounds to levels comparable with non-diabetic controls, promoting more mature granulation tissue formation and significantly increasing Fibroblast Growth Factor (FGF), a critical mediator of angiogenesis **(Crema *et al.*, 2021)**.

Further evidence comes from a randomized controlled trial in 2016, which examined the role of red-light therapy in patients with chronic wounds. The intervention group receiving PBMT showed significantly improved closure rates compared to controls, confirming that light therapy can serve as an effective adjunct to standard wound care **(Crema *et al.*, 2021)**. More recent reviews emphasize that the clinical success of PBMT depends heavily on parameters such as wavelength, dosage, and treatment duration, underscoring the importance of standardized, clinically validated protocols to ensure reproducibility and safety **(Mieczkowski *et al.*, 2022)**.

Despite its clear potential, clinical evidence for PBMT remains promising but inconsistent, particularly for chronic and diabetic wounds. A key limitation lies in the fact that many available devices are either bulky, rigid clinic-based systems or generic home-use products not specifically optimized for wound healing applications **(Patel *et al.*, 2022)**.

This gap highlights the need for tailored solutions capable of delivering continuous, localized, and adjustable phototherapy. A flexible, wearable infrared bandage represents a logical evolution, offering the ability to adapt therapy to the wound's dynamic state over time. Such devices could enable more consistent outcomes, facilitate remote monitoring, and integrate seamlessly into telehealth frameworks, thereby expanding access to advanced wound care while improving clinical efficacy.

2.5 Optimal Wavelengths and Dosage Parameters for Therapeutic Outcomes

The therapeutic efficacy of Photobiomodulation Therapy (PBMT) depends strongly on several interrelated parameters, including the wavelength of light, radiation dose, power density,

penetration depth, exposure duration, and treatment frequency. Additionally, patient-specific factors such as age, skin type, pigmentation, and anatomical location influence light absorption and clinical outcomes, making standardization of protocols a challenge **(Haba *et al.*, 2024a)**.

2.5.1. Optimal Wavelengths

Two wavelength ranges are most consistently associated with therapeutic benefits: **visible red light (600–750 nm)** and **near-infrared (NIR) light (750–1000 nm)**.

1. **Visible Red Light (e.g., 630, 632.8, 660 nm):**

   These shorter wavelengths penetrate tissues to a shallow depth, making them particularly effective for superficial wounds and skin regeneration. At low doses (0.5–1.0 J/cm²), 632.8 nm helium-neon (HeNe) laser irradiation has been shown to accelerate collagen synthesis in human skin fibroblasts, even under hyperglycemic conditions that typically suppress cellular function. Conversely, higher doses (e.g., 2 J/cm²) may exert inhibitory effects, highlighting the importance of precise dosing **(Haba *et al.*, 2024a)**. Similarly, a 660 nm laser was found to decrease expression of matrix metalloproteinases (MMP-2 and MMP-9) in diabetic rats, thereby reducing excessive inflammation and supporting tissue recovery **(Haba *et al.*, 2024a)**.

2. **Near-Infrared Light (e.g., 810, 904, 980 nm):**

   Longer wavelengths in the near-infrared spectrum generally exhibit greater effects on cell stimulation and possess higher penetrative power, allowing them to reach deeper tissues. An 810 nm infrared laser, for example, was effective in restoring healing responses in diabetic wounds to a level comparable to non-diabetic wounds, and it increased Fibroblast Growth Factor (FGF), which is crucial for angiogenesis. Interestingly, while 810 nm laser irradiation can activate NF-κB (a signaling pathway involved in inflammation) at earlier stages via Reactive Oxygen Species (ROS) generation, a 904 nm infrared laser at a low dose (5 J/cm²) has been shown to deactivate TNFα and NF-κB responses by decreasing ROS release in acute injury, thereby reducing the inflammatory response (Haba et al., 2024b). This suggests a sophisticated capacity for PBMT to trigger necessary early

inflammation while minimizing its prolonged, detrimental effects, ultimately shortening healing time.

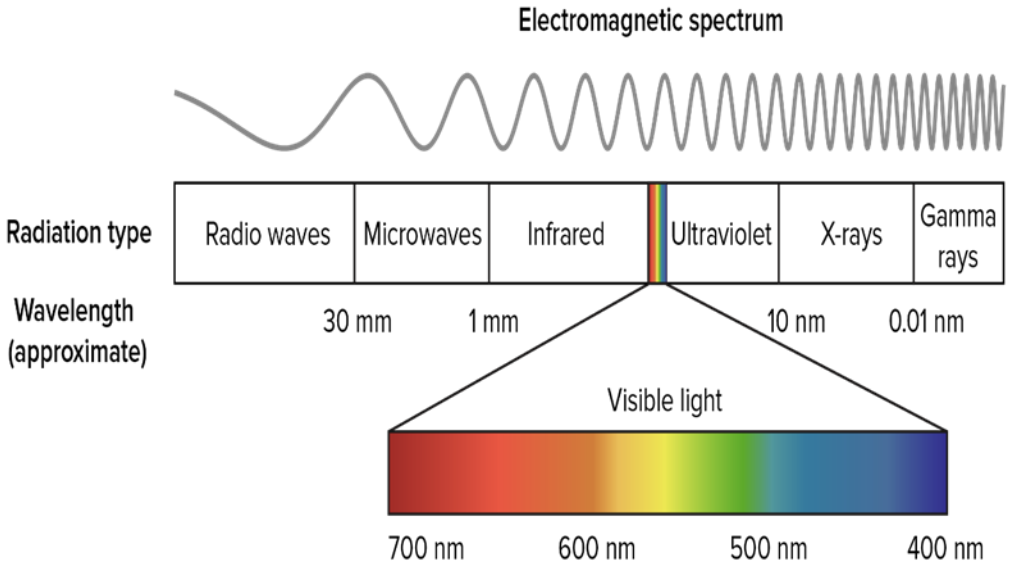

Figure 2.4: An image showing the electromagnetic spectrum **(Haba *et al.*, 2024b)**.

Figure 2.4 *presents the electromagnetic spectrum, highlighting the position of infrared radiation (700 nm to 1 mm) just beyond the visible red region. Infrared light is non-ionizing, enabling it to penetrate biological tissues safely without causing damage, which makes it particularly suitable for therapeutic use. In wound healing, infrared radiation enhances cellular metabolism, improves circulation, stimulates collagen synthesis, and accelerates tissue regeneration. This figure underscores the scientific rationale for integrating infrared light into the proposed bandage design, demonstrating its potential for safe, localized, and effective therapy to promote improved healing outcomes.*

2.5.2 Dosage and Power Density

The precise control of dosage and power density is paramount for achieving therapeutic efficacy. Due to the high penetrating power of infrared light, relatively low energy densities are often required for effective PBMT. Crucially, excess energy can convert into heat, potentially causing tissue damage or even inhibiting the healing process. For instance, a 980 nm laser treatment at 18 J/cm² enhanced wound healing in diabetic groups, but at 36 J/cm², a reduction in healing was

observed. Similarly, optimal healing rates in diabetic wounds were achieved at a low power density (0.1 W/cm²), while higher power densities (0.3 W/cm²) inhibited healing, even with the same total output energy. This highlights the critical need for precise and controlled light delivery **(Glass *et al.*, 2025)**.

Overall, these findings emphasize that wavelength and dosage are critical determinants of PBMT outcomes. While red light is effective for surface-level wounds, near-infrared light is more suitable for deep or chronic wounds, and inappropriate dosing may reduce therapeutic benefits or even impair healing. Future device development must therefore prioritize precise wavelength control and dosage calibration to ensure safe, consistent, and optimized clinical outcomes.

2.6 Limitations of Existing Light Therapy Devices in Wound Care

While photobiomodulation therapy (PBMT) holds great promise for wound healing, current light therapy devices face several key limitations that restrict their effectiveness and widespread use:

1. **Bulky and Rigid Design:** Most clinical light therapy devices are large and inflexible, making them difficult to use outside of hospital settings. Their size and rigidity prevent them from being comfortably worn on the body for continuous treatment, limiting accessibility and convenience.
2. **Limited Portability and Home Use:** Traditional devices often require specialized operators and come with high costs, making them impractical for home care. Many commercially available devices, especially those marketed for skincare, are not clinically validated for deeper therapeutic effects, such as wound healing or pain relief **(Patel *et al.*, 2022)**.
3. **Inability to Support Continuous Therapy:** Because these devices cannot conform to the body, they are unsuitable for prolonged or uninterrupted treatment. Continuous application is often essential for chronic wounds, where extended therapy significantly improves outcomes **(Hoffmann, 2020)**.

4. **Difficulty Adapting to Wound Shapes:** Conventional devices struggle to accommodate the wide variety of wound shapes and sizes across different body parts. This limitation makes it challenging to provide uniform and effective treatment.
5. **Challenges in Multi-Modal Delivery and Monitoring:** Existing wound care systems, such as those for gas transmitter delivery (e.g., nitric oxide or carbon monoxide), reveal broader issues in coordinated therapeutic delivery. Current systems often lack controlled release mechanisms and real-time monitoring, which limits therapeutic effectiveness. Integrating monitoring capabilities could optimize treatment outcomes and ensure precise delivery of therapeutic agents **(Haba *et al.*, 2024a)**.
6. **Limited Material Stretchability and Wavelength Options:** Some experimental flexible patches use materials like polyimide (PI) that are not sufficiently stretchable, reducing comfort and conformity. Additionally, many patches emit only a single wavelength (e.g., red light), restricting their ability to provide multi-spectral therapy that could be tailored to different wound stages or types.
7. **Manufacturing Challenges for High-Power Flexible Devices:** Creating flexible devices capable of delivering high-power light requires complex fabrication processes. Achieving both flexibility and therapeutic power density remains a significant engineering hurdle.

A common trend in these limitations is the bulkiness, rigidity, and lack of portability or conformability of existing devices. These constraints make continuous, home-based, and personalized therapy difficult, limiting both therapeutic outcomes and patient access **(Crema *et al.,* 2021).**

The inability of current devices to conform to the body and provide prolonged, localized therapy means that the full potential of PBMT remains largely untapped. Addressing this gap requires a shift from rigid, clinic-bound machines toward flexible, wearable systems. This underpins the primary goal of the proposed project: to develop a flexible and biocompatible bandage capable of continuous, personalized therapy. Achieving this requires careful consideration of not just light emission but also form factor, power delivery, and control systems to ensure true wearability and maximum therapeutic efficacy **(Ghosh *et al.*, 2023)**.

2.7 Enabling Technologies for Flexible and Biocompatible Bandages

Developing a flexible, biocompatible, and safe infrared light therapy bandage requires combining advanced technologies from materials science, electronics, and biomedical engineering **(Ghosh *et al.*, 2023; Haba *et al.*, 2024a).**

2.7.1 Biocompatible Materials for Skin-Contact Medical Devices

Biocompatibility is a fundamental requirement for any material intended for direct contact with the human body or biological tissue, ensuring it does not elicit adverse reactions, toxicity, or immunological rejection. This is particularly crucial for medical devices designed for prolonged skin contact.

While medical-grade silicone is commonly cited in literature as a flexible, biocompatible material for skin-contact devices, the bandage in this project is made of cotton. Cotton is naturally biocompatible, breathable, and comfortable for prolonged skin contact, making it a practical choice for continuous infrared therapy.

Figure 2.5: An image showing traditional bandages **(Ghosh *et al.*, 2023)**.

Figure 2. 5 *illustrates traditional medical bandages, which are widely used for wound protection, compression, and support during healing. While these bandages effectively provide a physical barrier and aid basic wound management, they lack active therapeutic functions, such as stimulating tissue regeneration or enhancing cellular repair processes* ***(Hoffmann, 2020)****.*

In the context of this project, this figure serves as a reference point, highlighting the limitations of conventional wound care. By comparing traditional bandages with modern, technology-enhanced alternatives—like the proposed infrared-emitting bandage—the image emphasizes the need for innovation in wound treatment. The goal is to move beyond passive protection, integrating infrared light therapy into flexible, wearable bandages that actively accelerate wound healing ***(Ghosh et al., 2023; Haba et al., 2024a).***

2.8 Advances in Flexible Light-Emitting Diodes (LEDs) and Optoelectronics for Wearable Applications

The limitations of bulky and rigid conventional light sources in medical applications have driven significant advances in flexible light-emitting diodes (LEDs) and optoelectronics. Today, wearable and implantable healthcare systems are being developed using deformable LEDs that can conform to any part of the body, paving the way for personalized and mobile photomedicine **(Jere *et al.*, 2018; Ghosh *et al.*, 2023)**.

1. **Organic light-emitting diodes (OLEDs)**, which are particularly attractive for medical applications due to their flexibility and emissive properties. Researchers are continually improving OLED performance by enhancing light out-coupling, eliminating post-pulse electroluminescence tails, and developing fast-response, low-noise photodiodes with high external quantum efficiency for integrated systems **(Crema *et al.*, 2021).** These innovations are essential for creating miniaturized and fully integrated biochemical sensors and therapeutic devices.

   For effective bioimaging and biosensing, optimizing red and near-infrared wavelengths is critical, as these wavelengths penetrate tissue more deeply and offer superior therapeutic efficacy. At the same time, precise control of light intensity is necessary to protect healthy tissue and ensure safe treatment **(Patel *et al.*, 2022)**.

2. Wearable optoelectronic patches represent a significant advancement in this field. These patches can interface directly with the skin for continuous monitoring and light-based therapy. For example, LED arrays with peak emissions around 660 nm can be combined with transparent thermal sensors, enabling co-located light delivery and real-time thermal monitoring **(Jere *et al.*, 2018)**. This integration supports closed-loop regulation of light delivery, ensuring optimal therapeutic effects while preventing overheating. Wireless power solutions, such as near-field communication (NFC), further enhance portability and convenience, allowing patients to receive diagnostics and therapy outside traditional clinical settings **(Ghosh et al., 2023)**.

2.9 Flexible Power Sources and Human-Body Energy Harvesting for Wearables

A major challenge in the widespread adoption and long-term use of wearable medical devices is their dependence on conventional batteries, which often require frequent recharging or replacement. This limitation has spurred extensive research into flexible power sources and human-body energy harvesting techniques **(Ghosh *et al.*, 2023)**.

Recent advancements have produced thin, lightweight, and flexible batteries, particularly flexible lithium-ion batteries, designed to bend and stretch without compromising performance.

These batteries are ideal for integration into wearable devices that conform to the body's dynamic contours. For instance, a study in *Advanced Materials* demonstrated that a flexible lithium-ion battery could retain its full capacity even after 1,000 bending cycles **(Nazari *et al.*, 2023)**.

Beyond conventional batteries, significant progress has been made in human-body energy harvesting. Ferroelectric materials are central to this development due to their spontaneous polarization, which responds to electric fields, temperature changes, and mechanical deformation. These materials are highly effective at converting mechanical energy from human motion into electrical energy via the direct piezoelectric effect. Self-powered devices using this approach can eliminate the need for external batteries by converting body movements or vibrations into usable

electrical power, which can then be stored in integrated capacitors or flexible batteries **(Haba *et al.*, 2024a)**.

A typical self-powered flexible wearable device combines several key components:

i. A flexible substrate for mechanical support,
ii. Sensors to detect physical stimuli,
iii. Actuators for motion,
iv. Interconnections for electrical signals,
v. Wireless transmission capabilities for data transfer, and
vi. An energy supply derived from body energy harvesting **(Ghosh *et al.*, 2023)**.

These components are usually integrated using a stacked, layer-by-layer approach, with each element engineered to withstand high strain while maintaining functionality under dynamic conditions. The development of such self-sustaining power solutions is critical for enabling continuous, long-term operation of flexible medical bandages without the need for user intervention or frequent recharging.

2.10 Thermal Management Strategies in Flexible Wearable Electronics

Flexible wearable electronics, including medical devices, naturally generate heat during operation. Without effective thermal management, this heat can cause discomfort, degrade device performance, and even pose safety risks such as skin burns. Traditional cooling approaches—like bulky heat sinks or liquid-cooling systems—are impractical for wearables due to their size and rigidity, which conflicts with the fundamental requirements for flexibility and comfort **(Kim *et al.*, 2021)**.

To address these challenges, researchers have developed innovative solutions. One notable approach involves ultrathin, soft, radiative cooling interfaces (USRI). These micrometer-thick polymeric coatings dissipate heat through both radiative and non-radiative mechanisms, achieving

temperature reductions of up to 56°C **(Li *et al.*, 2023)**. Such strategies represent a transformative improvement for wearable devices, ensuring user comfort while maintaining optimal performance.

The integration of temperature sensors into wearable systems enables real-time thermal monitoring and closed-loop control of heat output. For example, a wireless optoelectronic skin patch has demonstrated closed-loop thermal regulation, where feedback from a transparent thermal sensor, co-located with an LED array, is used to adjust optical output. This system can deactivate the LED when the skin temperature exceeds a preset threshold (e.g., 36.2°C, safely below the 42°C tissue damage threshold), ensuring long-term safety and preventing overheating **(Kim *et al.*, 2021)**.

2.10.1 Other strategies for thermal management in flexible electronics include:

1. **Material Selection:** Using thermally conductive materials, such as graphite films bonded to polydimethylsiloxane (PDMS), to reduce surface temperature.
2. **Component Placement:** Strategically arranging components and traces, including rigid-flex PCB designs, to manage heat distribution and avoid high-stress areas.
3. **Advanced Coatings:** Employing thermally conductive textiles or self-cooling coatings that actively spread heat or regulate temperature through phase-change materials or diode-like behavior.
4. **AI-Controlled Thermal Feedback:** Emerging approaches integrate artificial intelligence with thermal feedback systems, enabling wearables to maintain safe and efficient operation in diverse environments.

Implementing these strategies is critical for ensuring the safety, comfort, and long-term reliability of flexible infrared light therapy bandages. By controlling heat effectively, these systems can prevent thermal damage to the skin while maintaining the therapeutic benefits of photobiomodulation therapy.

2.11 FDA Regulatory Requirements and Biocompatibility Standards for Light-Emitting Medical Devices

In the United States, any light therapy device intended for therapeutic use must obtain FDA clearance before it can be legally marketed. This clearance is more than a regulatory formality—

it assures healthcare providers and consumers that the device meets rigorous safety and performance standards. Without FDA approval, manufacturers are prohibited from marketing light therapy devices for therapeutic purposes in the U.S. **(Patel *et al.*, 2023)**.

The FDA determines regulatory requirements based on the device's intended use and marketing claims. Devices that claim therapeutic benefits—such as promoting wound healing, reducing pain, treating acne, or minimizing wrinkles—are classified as medical devices and must comply with corresponding regulations. In contrast, products marketed purely for cosmetic purposes, such as general skin rejuvenation, follow a separate set of guidelines. While these cosmetic products do not require FDA clearance, they must still meet general safety, labeling, and marketing standards and are prohibited from making medical claims **(Patel *et al.*, 2023)**.

2.11.1 FDA classification of medical devices

The FDA classifies medical devices into three risk-based categories, reflecting their potential risk to patients and the level of regulatory oversight required:

1. **Class I:** These are low-risk devices, often general wellness light therapy products. They typically do not require premarket notification but must adhere to FDA labeling and manufacturing standards.
2. **Class II:** These are moderate-risk devices, encompassing most light therapy products intended for applications such as acne treatment, pain management, hair growth, and wrinkle reduction. Devices in this class require **510(k) clearance**, which involves demonstrating that they are "substantially equivalent" to a device already legally marketed in the U.S. (a "predicate device").
3. **Class III:** These are high-risk devices, typically associated with advanced medical treatments. While less common for light therapy, some laser-based therapies may fall into this category, necessitating extensive clinical trials and a more rigorous FDA premarket approval (PMA) process.

For most light therapy devices, the **510(k)-clearance process** is the standard pathway to FDA approval. This process involves several key steps:

1. **Identifying a Predicate Device:** The manufacturer must first identify a device that has already been cleared by the FDA and shares the same intended use and similar technological characteristics.

2. **Safety and Performance Testing:** The new device must undergo comprehensive testing to assess its safety and performance. This includes evaluating wavelength accuracy, energy output, and biocompatibility. Biocompatibility testing specifically involves assessing cytotoxicity, irritation potential, and sensitization potential.

3. **510(k) Submission:** Manufacturers compile the results of these tests, along with detailed technical documentation, risk assessments, and labeling information, into a comprehensive 510(k) submission.

4. **FDA Review:** The FDA typically reviews the submission within three to six months, evaluating whether the product meets the required safety and effectiveness standards.

5. **Clearance:** Upon approval, the device is assigned a unique FDA 510(k) number, confirming its eligibility for market entry.

FDA clearance is a symbol of trust and credibility. It assures consumers, healthcare providers, and retailers that the device adheres to stringent safety and performance benchmarks. For manufacturers, obtaining FDA clearance facilitates access to the U.S. market and enhances brand reputation. It also aids in international expansion, as FDA standards are often recognized globally as a benchmark for medical device safety **(Amaral *et al.*, 2024)**. Furthermore, all radiation-emitting products must comply with specific federal standards outlined in 21 CFR Part 1000, including detailed labeling requirements for manufacturer information, place and date of manufacture, and specific warnings for high-voltage or X-ray producing components **(Patel *et al.*, 2023)**.

CHAPTER THREE

MATERIALS AND METHODS

3.0 Introduction

This chapter describes the materials and methods used in the design and development of the flexible and biocompatible IR light therapy bandage for wound healing.

The design process was guided by principles of biomedical engineering and medical physics, incorporating infrared therapy and temperature regulation to achieve therapeutic effect.

Additionally, this chapter details the fabrication of the prototype, and the methods outlined herein serve as the foundation for the development of an innovative and efficient therapeutic IR bandage with the emission of non- ionizing radiation which is considered safe.

3.1 Materials

The materials for this study were carefully selected based on biocompatibility, durability, functionality, and cost-effectiveness. **Table 1.0** summarizes the key materials and components used in the development of the flexible IR light therapy bandage.

Table 1.0: A Table of the Components, their Specifications, Quantity, and Amount

Name of components/ materials	Specifications	Quantity	Amount (GHS)
Slide Switch	-	1	10.00
Non-latching Switch	0-240V DC/ AC	1	10.00
PCB	-	1	10.00
Dual MOSFET timer relay	5-35V DC	1	400
Digital Thermostat	12V DC	1	100
Mini Project box	125x80x32 mm	1	200
Connecting Wires	-	2 yards	30.00
Power Port	1-35 V DC	2	20.00
Solder	-	1	100
Non-self-adhesive Cotton Medical Elastic Bandage	10x45 cm	1	30.00
Lithium-ion battery	12V DC	1	300
Infrared LED strip	12V DC, 850 nm	1 yard	500
TOTAL			**1,710.00**

3.1.1 Components

I. Printed Circuit Board (PCB) – The PCB acts as a foundational platform that electrically connects components while providing a sturdy, organized structure to securely hold them in place. The PCB used in the circuit is shown in Figure 3.1.

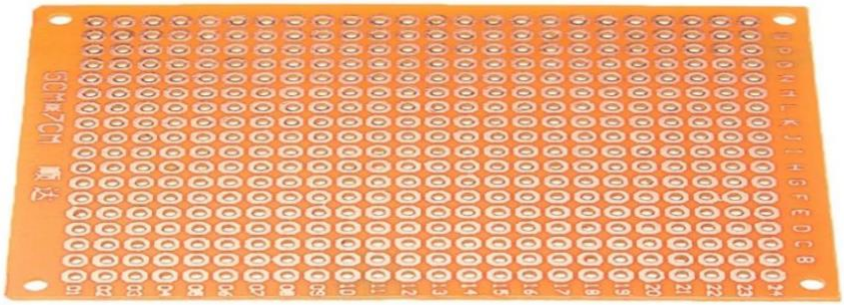

Figure 3.1: An image of Printed Circuit Board (PCB) (Authors' own image).

II. The dual MOSFET digital timer relay – This module initiates a delay or terminates an electronic process, with a continuously adjustable timing range from 0.1 seconds to 999 minutes. Operating within a voltage range of 5–35 V DC, it was employed to control the infrared LEDs exposure to the wound in a timely manner. The dual MOSFET timer relay used in the system is illustrated in Figure 3.2.

Figure 3.2: An image of dual MOSFET digital timer relay (Authors' own image).

III. Connecting wires – Connecting wires are insulated conductors used to transmit electrical signals or power between components in a circuit. The connecting wires used were made of copper due to its high conductivity of electric current. The connecting wires used in the system are shown in Figure 3.3.

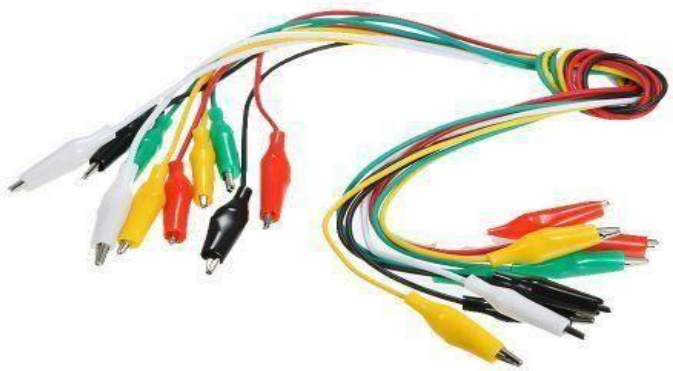

Figure 3.3: An image of connecting wires (Authors' own image).

IV. Slide Switch – A slide switch is an electrical component that opens or closes a circuit, controlling the flow of electricity. It plays a critical role in power control, automation, and circuit protection.

A switch operates by creating or breaking an electrical connection: Closed Position (ON): Allows current to flow. Open Position (OFF): Stops current flow. The slide switch used in the bandage circuit is presented in Figure 3.4.

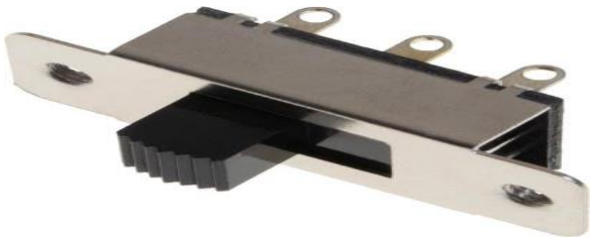

Figure 3.4: An image of a slide switch (Authors' own image).

V. Non-latching Switch – A non-latching (momentary) switch is an electrical component that remains in the ON state only while being pressed, automatically returning to its default OFF position once released. This makes it ideal for applications requiring temporary activation. In this setup, it is used to trigger the dual MOSFET and initiates the exposure time. The non-latching switch is shown in Figure 3.5.

Figure 3.5: Non-latching switch (Authors' own image).

VI. Lithium-ion battery – Lithium-ion batteries are rechargeable energy storage devices commonly used in portable electronics, electric vehicles, and renewable energy systems. They function by transferring lithium ions between the anode and cathode through an electrolyte during charge and discharge cycles. Valued for their high energy density, lightweight construction, and extended cycle life, these batteries are integral to modern technology.

However, they require careful handling due to risks such as overheating and potential fire hazards.]In this application, the lithium-ion battery serves as the primary power source for the circuit. The lithium-ion battery powering the device is shown in Figure 3.6.

Figure 3.6: An image of a lithium-ion battery (Authors' own image).

VII. Mini project box - A mini project box is a protective enclosure used to house electronic components and circuitry with dimensions of 125x80x32 mm (LxWxH). It is made of Acrylonitrile Butadiene Styrene (ABS) plastic, durable and lightweight, and impact-resistant thermoplastic designed to safeguard the internal elements from dust, moisture, and physical damage while providing a neat and professional appearance. The protective mini project box is illustrated in Figure 3.7.

Figure 3.7: An image of a project box (Authors' own image).

VIII. Power port - A power port is an interface or socket on a device that allows it to connect to an external power source. It's designed to receive electrical energy for operation or charging. The power port used for external connection is shown in Figure 3.8.

Figure 3.8: An image of a connecting port (Authors' own image).

IX. Digital Thermostat - is an electronic device used to monitor and regulate temperature with precision. Unlike analog thermostats, it uses sensors and microcontrollers to detect temperature changes and display real-time temperature on a digital interface. The digital thermostat integrated into the circuit is shown in Figure 3.9.

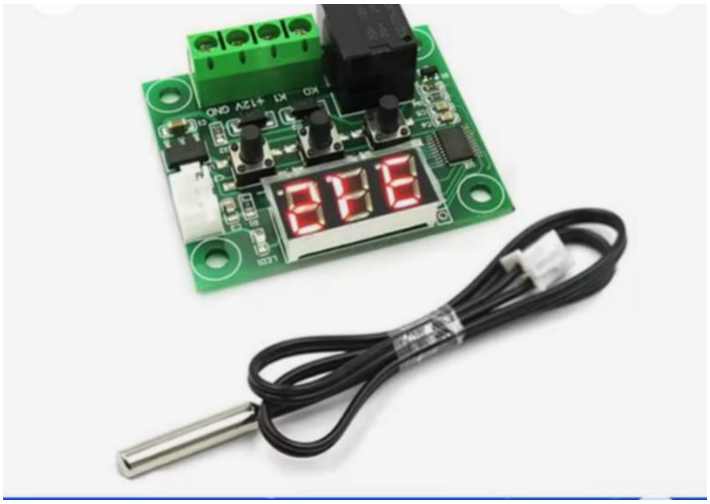

Figure 3.9: An image of a thermostat (Authors' own image).

X. Infrared LED - An infrared LED emits invisible light used for non-invasive therapy. It stimulates cells, improves circulation, and supports wound healing—making it ideal for biomedical applications. The infrared LED strip integrated into the bandage is shown in Figure 3.10.

Figure 3.10: An image of the infrared light (Authors' own image).

XI. Non-self-adhesive cotton medical elastic bandage - A non-self adhesive cotton medical elastic bandage is a type of bandage for support, compression, or dressing wound. It is made primarily of 100 % or high blend cotton (soft, breathable, and skin friendly) and is washable and durable. The cotton medical elastic bandage serving as the base material is illustrated in Figure 3.11.

Figure 3.11: An image of non-self-adhesive cotton medical elastic bandage (Authors' own image).

3.2 Methods

The design and development of the bandage followed a systematic approach. First, the materials required were identified and procured. The design was guided by the functional requirements of the system, and verification of its performance was carried out theoretically. The following subsections present the block diagram, circuit diagram and flowchart.

3.2.1 Block Diagram

The block diagram of the infrared bandage is shown in Figure 3.12 below:

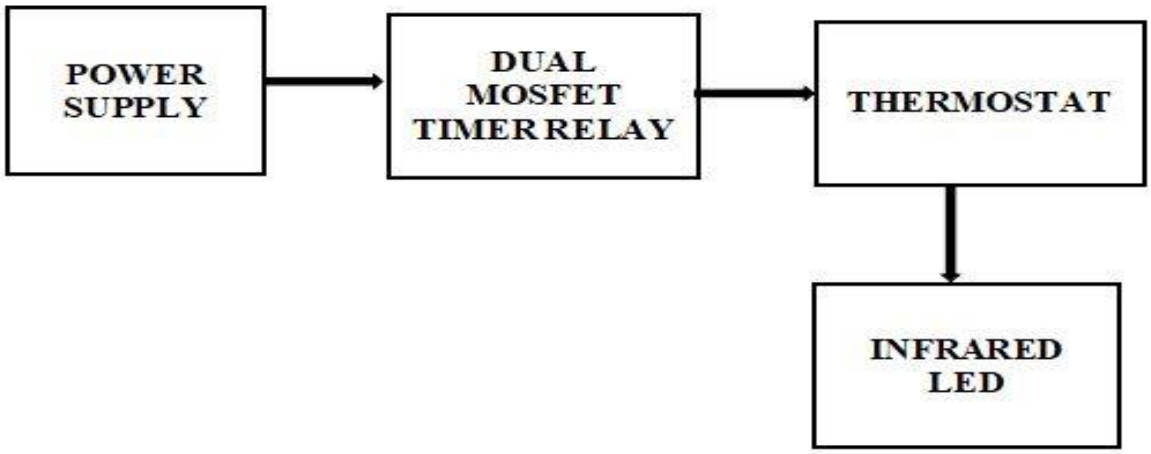

Figure 3.12: An image of the block diagram of the infrared bandage.

The block diagram represents the core control architecture supporting the development of the flexible and biocompatible infrared light therapy bandage for wound healing. At the foundation of the system is a power supply that delivers stable DC voltage, ensuring consistent and reliable operation of all components.

This feeds into a dual MOSFET timer relay, which plays a critical role in regulating the activation duration of the infrared light and associated modules.

By enabling precise timing control, it prevents overexposure and thermal stress, contributing to the safety and biocompatibility of the therapy.

The digital thermostat follows, continuously monitoring and adjusting the temperature to maintain an optimal therapeutic range. This ensures that the infrared light operates within safe limits, protecting delicate tissue and enhancing the effectiveness of the healing process.

Finally, the infrared module emits targeted light therapy, stimulating cellular regeneration, improving blood circulation, and accelerating tissue repair. Together, these components form a responsive and intelligent system that aligns seamlessly with the project's goals—delivering controlled, safe, and effective infrared therapy through a wearable bandage designed for clinical and home use.

3.2.2 Circuit Diagram

The circuit diagram of the infrared bandage shown in Figure 3.13

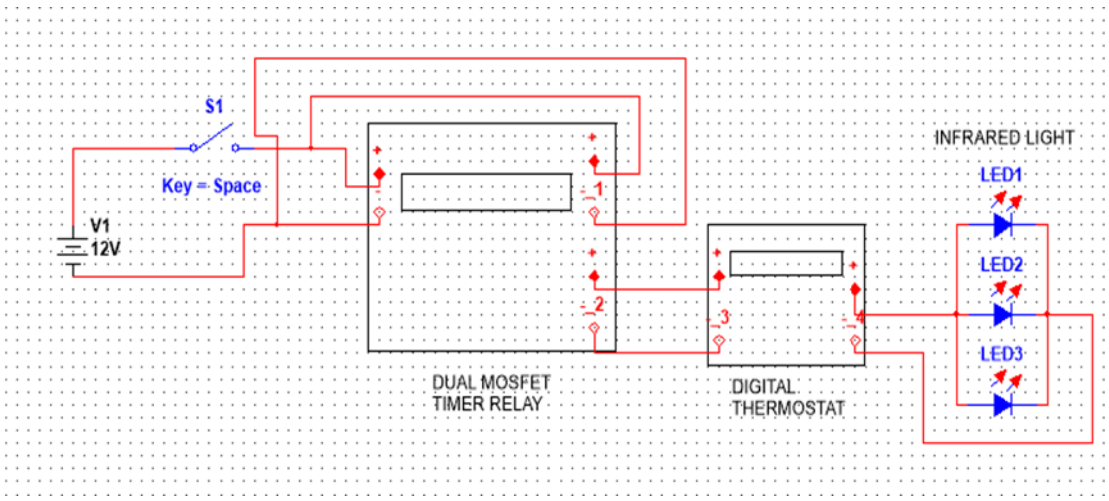

Figure 3.13: An image of the circuit diagram of the infrared bandage.

The circuit schematic is a key component in achieving the project's goal of developing a flexible, biocompatible, and safe infrared (IR) light therapy bandage for accelerated wound healing. It integrates precise control mechanisms to regulate IR light delivery, ensuring both efficacy and safety.

The system is powered by a 12V DC supply connected to a momentary switch (S1), allowing the user to manually initiate therapy. This design prevents accidental activation, ensuring that IR exposure occurs only when intended.

The switch feeds into a dual MOSFET timer relay, which controls the duration of IR light emission. Adjustable timing ensures that therapy is delivered within clinically safe intervals, reducing the risk of overheating or tissue damage.

A digital thermostat is integrated downstream to monitor and regulate system temperature, maintaining it within the optimal therapeutic range. This feature is crucial for biocompatibility, as excessive heat can impair tissue integrity and hinder the healing process.

Finally, the circuit powers infrared LEDs arranged in parallel, which provide targeted light to stimulate cellular activity, enhance blood flow, and promote tissue regeneration. The parallel configuration ensures uniform light distribution across the bandage surface, enabling consistent therapeutic coverage and maximizing the efficacy of the treatment.

3.2.3 Flowchart

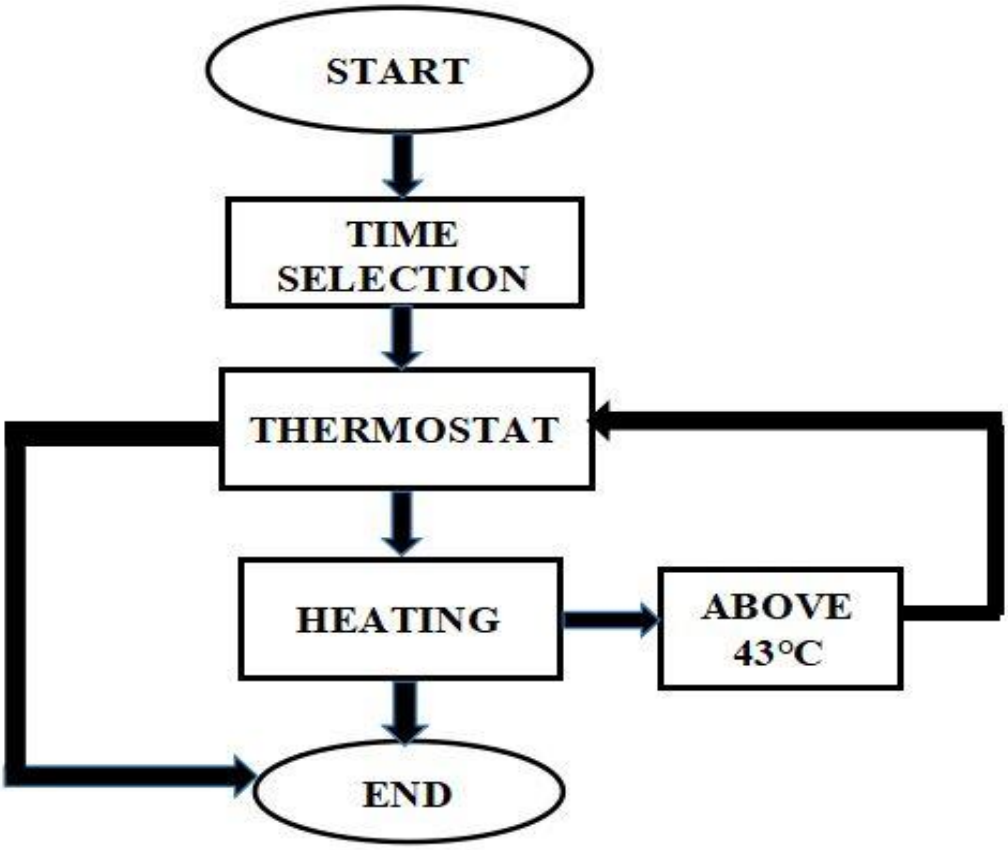

Figure 3.14: An image of the flowchart of the infrared bandage.

The flowchart represents a control logic system that aligns closely with the operational goals of the infrared light therapy bandage project. At its core, the process begins with system initialization ("START"), followed by a time selection phase where the user or clinician sets the duration of infrared exposure, an essential step for ensuring therapeutic precision.

The next stage, "THERMOSTAT," introduces a safety mechanism that monitors skin temperature to prevent overheating, thereby supporting the safety aspects of the bandage. Once the temperature is deemed safe, the "HEATING" phase activates the infrared emitters to deliver controlled

therapeutic warmth to the wound site, promoting healing through enhanced circulation and cellular repair.

The process concludes with "END," signaling the termination of the therapy session either after the preset time or upon reaching a safety threshold. The feedback loop allows the thermostat to cut power to the LEDs when the threshold temperature is exceeded.

CHAPTER FOUR

RESULTS AND DISCUSSIONS

4.0 Introduction

This chapter presents and discusses the experimental results obtained from testing the designed infrared (IR) bandage for wound therapy. The performance evaluation focused on the temperature response of the bandage with time and the irradiance output from the infrared light-emitting diodes (LEDs). These parameters are essential indicators of the bandage's ability to provide effective photothermal stimulation and photobiomodulation, which are critical for accelerating wound healing **(Hamblin, 2017)**.

4.1 Temperature Response with Respect to Time

Table 2.0 shows the temperature variation across three different measurement points (T1, T2, and T3) on the surface of the infrared bandage over a 20-minute operational period. The initial mean temperature of 28.8 °C at minute 1 gradually increased to a maximum mean temperature of 42.7 °C at the 20th minute, as illustrated in **Figure 4.1**. This steady rise demonstrates the thermal efficiency of the bandage and confirms the infrared emitters' effectiveness in producing a controlled heating effect suitable for therapeutic purposes.

The temperature increase follows a near-linear trend in the first ten minutes before reaching a steady state around 41–43 °C. This range falls within the optimal therapeutic temperature range (40–43 °C) for enhancing blood perfusion, collagen synthesis, and oxygenation at the wound site without causing tissue damage **(Choi *et al.*, 2019; Kang *et al.*, 2021)**.

The temperature rise can be expressed by the heat transfer relationship:

$$Q = mc\Delta T \quad \text{.....} \quad (1)$$

where **Q** is the heat energy absorbed (J),

m is the mass of tissue or material exposed (kg),

c is the specific heat capacity (J/kg·°C), and

ΔT is the change in temperature (°C).

The gradual rise in temperature indicates consistent energy delivery from the IR LEDs and efficient thermal retention within the bandage matrix.

Table 2.0 Temperature variation with respect to time.

Time (Min)	Temp(ºC) (T1)	Temp(ºC) (T2)	Temp (ºC) (T3)	Mean Temp (ºC)	S.D
1	28.6	29.0	28.8	28.800	0.200
2	30.2	32.1	29.5	30.600	1.345
3	32.8	33.9	32.8	33.167	0.635
4	34.0	35.3	34.7	34.667	0.651
5	35.6	36.9	36.2	36.233	0.651
6	36.7	37.9	37.4	37.333	0.603
7	37.9	38.9	38.4	38.400	0.5
8	38.6	40.0	39.2	39.267	0.702
9	39.2	40.7	39.7	39.867	0.764
10	39.8	41.1	39.9	40.267	0.723
11	40.2	41.1	40.8	40.700	0.458
12	40.6	41.4	41.2	41.067	0.416
13	41.0	41.6	41.4	41.333	0.306
14	41.3	41.9	41.5	41.567	0.306
15	41.8	42.1	42.0	41.967	0.153
16	41.8	42.1	42.0	41.967	0.153
17	41.8	42.1	42.4	42.100	0.3
18	41.8	42.5	42.5	42.267	0.404
19	42.2	42.5	42.5	42.400	0.173
20	42.4	42.9	42.8	42.700	0.265

4.2 Irradiance Measurement

The irradiance measured from the bandage was 31 $\mu W/cm^2/nm$, which represents the radiant power emitted per unit area per wavelength interval. This irradiance level falls within the safe and effective therapeutic window for low-level light therapy (LLLT), typically ranging from 10 to 50 $\mu W/cm^2/nm$ **(Hamblin, 2018)**.

The total radiant flux **P** can be approximated using:

$$P = E \times A \quad \text{.....} (2)$$

where, **E** is the irradiance (W/m^2)

A is the exposed area (m^2).

Assuming the wound exposure area is 70 cm^2, which is the case of the area of the infrared bandage designed, the total radiant flux is approximately:

$$P = 31 \times 10^{-6} \text{ x } 70 = 2.17 \text{ x } 10^{-3} \text{ W/nm}$$

This corresponds to approximately 2.17 mW/nm, indicating that the bandage delivers a radiant output suitable for photobiomodulation therapy (PBMT). According to **Hamblin (2018)**, effective tissue-level stimulation for wound healing typically occurs within the radiant power range of 1 mW to 5 mW at near-infrared wavelengths. This power density enhances mitochondrial activation, ATP synthesis, and cell proliferation, all of which contribute to faster wound closure and improved tissue repair **(Ferroni *et al.*, 2020)**.

The computed radiant flux of 2.17 mW/nm thus lies comfortably within this therapeutic window, confirming that the designed infrared bandage can deliver clinically effective yet biologically safe energy doses. This balance ensures optimal photothermal and photochemical stimulation without exceeding thresholds that could cause tissue overheating or oxidative stress **(Hamblin, 2017; Choi *et al.*, 2019)**.

4.3 Thermal Stability and Safety Considerations

The standard deviation (S.D.) values in **Table 2.0** ranged from 0.153 °C to 1.345 °C, showing low variability in temperature distribution, which implies uniform heat dissipation across the bandage

surface. The small S.D. values at steady state (after minute 12) indicate stable temperature regulation, minimizing the risk of localized overheating or burns. Maintaining thermal uniformity is vital to ensuring consistent wound healing outcomes **(Choi *et al.*, 2019)**.

The findings confirm that the designed infrared bandage can produce both sufficient thermal stimulation (up to 42.7 °C) and therapeutic irradiance (31 µW/cm²/nm) within safe biological limits. The results demonstrate strong potential for wound healing applications by promoting vasodilation, tissue oxygenation, and cellular repair **(Hamblin, 2018)**. The observed temperature plateau suggests an equilibrium between heat generation and dissipation, which is ideal for prolonged clinical use.

Figure 4.1 below illustrates the mean temperature distribution of the infrared therapeutic bandage over a 20-minute period under a controlled irradiance of 31 µW/cm²/nm. The graph reveals a clear upward trend in temperature, beginning near 29 °C and gradually rising to approximately 41 °C, with the curve plateauing toward the end of the cycle. This thermal behavior is critical for validating the bandage's ability to deliver sustained and controlled heat within the therapeutic range required for wound healing.

The gradual rise followed by stabilization suggests that the bandage reaches thermal equilibrium, minimizing the risk of overheating while ensuring consistent heat delivery. This is particularly significant for wound therapy, where maintaining temperatures between 40 °C and 43 °C has been shown to enhance microcirculation, stimulate fibroblast activity, and support antimicrobial effects (Ekka, 2025; Shin et al., 2024). The smooth curve also reflects the reliability of the device's heating mechanism and its suitability for prolonged clinical use.

By demonstrating predictable and stable thermal output, Figure 20 reinforces the bandage's potential as a safe and effective tool for non-invasive wound management. It also provides quantitative evidence supporting the design's efficacy, which is essential for future clinical trials, regulatory approval, and integration into smart wound care systems.

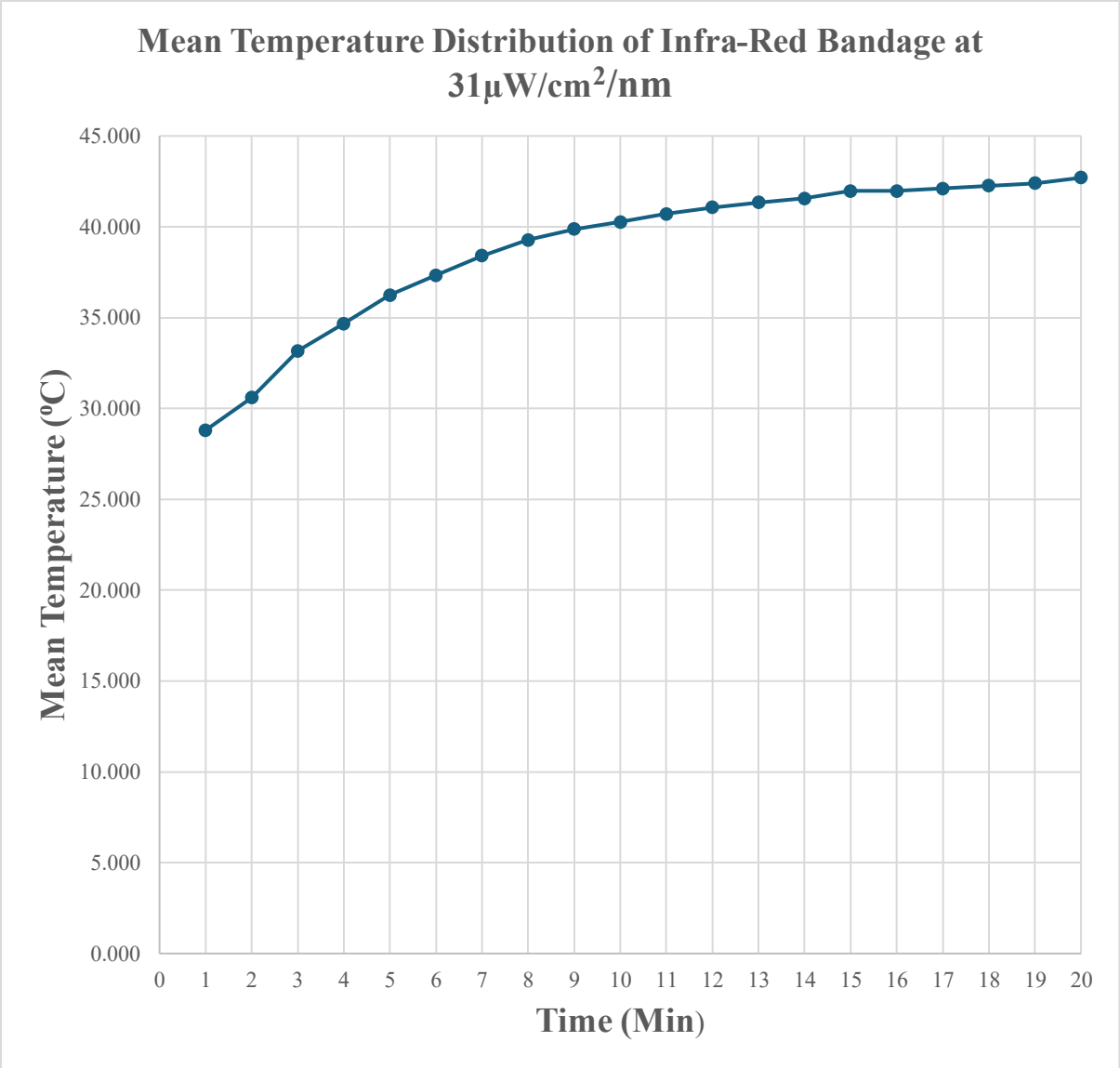

Figure 4.1: A graph of temperature variation with respect to time.

The bandage demonstrated a progressive increase in temperature, beginning at a mean of 28.80 °C and reaching 42.70 °C by minute 20. This heating profile can be segmented into three distinct phases:

During the first five minutes, the temperature rose rapidly from 28.80 °C to 37.77 °C. The standard deviation peaked at 1.345 °C at minute 2, indicating transient thermal instability. This variability

is expected during the initial activation of infrared devices, as heat distribution stabilizes across the bandage surface **(Ullah *et al.*, 2024)**.

From minute 6 onward, the temperature increase became more gradual, with mean values rising from 38.60 °C to 41.60 °C. The standard deviation dropped to 0.100 °C, reflecting improved consistency in repeated measurements. This phase marks the transition to controlled heating, essential for safe and effective wound therapy **(Beeby *et al.*, 2024)**.

Between minutes 11 and 20, the bandage maintained a consistent temperature range between 41.70 °C and 42.70 °C. This range aligns with the therapeutic window for infrared wound therapy, typically spanning 40–43 °C to stimulate vasodilation, collagen synthesis, and antimicrobial activity **(Ekka, 2025; RedInfraHealth, n.d.)**.

Although only one sensor was used, triplicate readings at each time point provided a robust method for assessing measurement reliability. The low standard deviation values, especially from minute 6 onward—indicate minimal variation between repeated readings, suggesting high precision and repeatability. This approach is consistent with best practices in biomedical device validation, where repeated measures help mitigate sensor drift and transient noise **(IEEE, 2021)**.

Infrared therapy has been shown to accelerate wound healing by enhancing microcirculation, promoting fibroblast activity, and reducing bacterial load **(Biovie, n.d.; Shin *et al.*, 2024)**. The bandage's ability to reach and sustain therapeutic temperatures within 9 minutes supports its potential for clinical application in chronic wound management, diabetic ulcers, and post-surgical recovery.

Figure 4.2: Testing of irradiance from the prototype.

Figure 4.2 *illustrates the testing of irradiance of the prototype. The control unit houses the battery, which powers the infrared LEDs that emit the therapeutic light. The MTTS irradiance meter is used to measure the emitted irradiance to confirm that it falls within the therapeutic range suitable for low- level light therapy (LLLT) applications.*

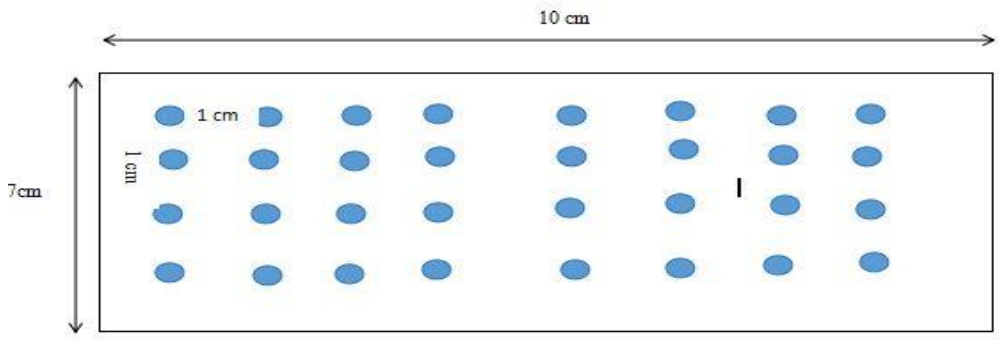

Figure 4.3: Schematic diagram of arrangement of IR LED lights on a 70cm^2 area of medical grade bandage.

Figure 4.3 *shows the schematic diagram illustrating the arrangement of the infrared LEDs on a bandage area measuring 10 cm in length and 7 in breadth, giving a total area of 70cm^2*

CHAPTER FIVE

CONCLUSION AND RECOMMENDATIONS

5.0 Introduction

This chapter presents a concise summary of the major findings of the study, draws relevant conclusions from the results obtained, and provides recommendations for future improvement and research. The chapter highlights the performance outcomes of the designed infrared bandage for wound healing, emphasizing its effectiveness in providing controlled thermal and optical energy suitable for photobiomodulation therapy. The results discussed in Chapter Four demonstrated the feasibility of the device in maintaining therapeutic temperature and irradiance levels essential for tissue regeneration and wound recovery. The chapter therefore synthesizes these key outcomes into practical insights and forward-looking recommendations for further development and clinical application.

5.1 Summary of Findings

This study focused on the design, development, and theoretical evaluation of an infrared (IR) therapeutic bandage aimed at accelerating wound healing. The bandage was developed using infrared light-emitting diodes (LEDs) integrated onto a flexible textile structure and powered by a battery. The experimental evaluation was centered on the temperature variation with time and irradiance output of the bandage.

The temperature of the bandage increased progressively from 28.8 °C at minute one to 42.7 °C at the 20th minute, falling within the therapeutic temperature window of 40–43 °C. This temperature range is suitable for enhancing tissue perfusion, stimulating fibroblast activity, and promoting collagen synthesis **(Choi *et al.*, 2019; Hamblin, 2018)**. The results further showed a low standard deviation (0.153–1.345 °C), indicating stable and uniform heat distribution.

Additionally, the measured irradiance of 31 μW/cm²/nm produced a total radiant flux of 2.17×10^{-3} W/nm (≈ 2.17 mW/nm) for a wound area of 70 cm². This radiant power lies within the clinically recommended photobiomodulation range (1–5 mW/nm) **(Hamblin, 2017)**, confirming that the bandage emits sufficient optical energy to activate cytochrome c oxidase and enhance ATP

production in wounded tissues **(Ferroni *et al.*, 2020)**. The performance evaluation demonstrated that the device operated safely and effectively without overheating or electrical instability.

5.2 Conclusion

The design and testing of the infrared bandage have demonstrated that controlled infrared radiation can be effectively applied to wound therapy. The system achieved a safe and stable temperature range conducive to healing, as well as irradiance and radiant flux levels consistent with therapeutic standards.

From the analysis, it can be concluded that:

The infrared bandage achieved a steady-state therapeutic temperature suitable for wound healing (40–43 °C) within 20 minutes of operation.

The measured irradiance and radiant flux (31 μW/cm²/nm and 2.17 mW/nm) fall within the safe and effective photobiomodulation range, promoting biological processes responsible for tissue regeneration.

The design is technically feasible and energy-efficient, making it adaptable for clinical and home-based wound management applications.

Overall, the developed infrared bandage demonstrates the potential to serve as a cost-effective, non-invasive therapeutic device that enhances wound healing rates, especially in resource-constrained healthcare settings.

5.3 Recommendations

Based on the study findings, the following recommendations are made:

1. **Conduct Clinical Trials**: To validate therapeutic efficacy, the infrared bandage should undergo in-vivo and clinical testing to assess wound healing outcomes and ensure biocompatibility.

2. **Smart Integration:** Future prototypes may incorporate Bluetooth or IoT connectivity for real-time monitoring of wound temperature and treatment duration.

3. **Commercial and Patent Development:** Given its performance, the infrared bandage can be patented and commercialized for use in hospitals, physiotherapy centers, and home-based care setups.

REFERENCES

1. Amaral, C., Paiva, M., Rodrigues, A. R., Veiga, F., & Bell, V. (2024). Global Regulatory Challenges for Medical Devices: Impact on Innovation and Market Access. *Applied Sciences (Switzerland, 14*(20)). Multidisciplinary Digital Publishing Institute (MDPI). https://doi.org/10.3390/app14209304

2. Barolet, A. (2021). *Photobiomodulation in the near infrared and red spectra induces nitric oxide release in ex-vivo human skin homogenate via enzymatic pathways.*

3. Beeby, S. P., Komolafe, A., & Ullah, I. (2024). *UVC-enabled smart bandage for treatment and temperature monitoring of chronic wounds*. MDPI. https://www.mdpi.com/2673-4591/52/1/12

4. Biovie. (n.d.). *Infrared light and wound healing: mechanisms and applications*. https://www.biovie.fr/en/blog/infrared-light-and-wound-healing-n765

5. Choi, H., Lim, H., Lee, M., & Kim, Y. (2019). Effect of infrared radiation on wound healing in rat models. *Journal of Biomedical Engineering Research, 40*(2), 145–152.

6. Crema, A., Scarpa, C., Sonda, R., Rizzato, S., Masciopinto, G., & Bassetto, F. (2021). Fluorescent Light Energy and Chronic Lesions: A Winning Association. *Plastic and Reconstructive Surgery - Global Open*, *9*(7), E3667. https://doi.org/10.1097/GOX.0000000000003667

7. Dompe, C., Moncrieff, L., Matys, J., Grzech-Leśniak, K., Kocherova, I., Bryja, A., Bruska, M., Dominiak, M., Mozdziak, P., Skiba, T. H. I., Shibli, J. A., Volponi, A. A., Kempisty, B., & Dyszkiewicz-Konwińska, M. (2020). Photobiomodulation—underlying mechanism and clinical applications. *Journal of Clinical Medicine, 9*(6), 1–17. https://doi.org/10.3390/jcm9061724

8. Doulgkeroglou, M. N., Di Nubila, A., Niessing, B., König, N., Schmitt, R. H., Damen, J., Szilvassy, S. J., Chang, W., Csontos, L., Louis, S., Kugelmeier, P., Ronfard, V., Bayon, Y., & Zeugolis, D. I. (2020). Automation, Monitoring, and Standardization of Cell Product Manufacturing. *Frontiers in Bioengineering and Biotechnology, 8,*811. https://doi.org/10.3389/fbioe.2020.00811

9. Ekka, S. S. (2025). *Infrared therapy in physiotherapy: Benefits, uses & safety guide*. PhysiosUnit. https://physiosunit.com/infrared-rays-in-physiotherapy-and-its-uses/

10. Ferroni, L., Zago, M., Patergnani, S., Campbell, S. E., Hébert, L., Nielsen, M., ... & Zavan, B. (2020). Fluorescent light energy (FLE) acts on mitochondrial physiology improving wound healing. *Journal of Clinical Medicine, 9*(2), 559.

11. Ghosh, A., Nag, S., Gomes, A., Gosavi, A., Ghule, G., Kundu, A., Purohit, B., & Srivastava, R. (2023). Applications of Smart Material Sensors and Soft Electronics in Healthcare Wearables for Better User Compliance. *Micromachines, 14*(1),121. https://doi.org/10.3390/mi14010121

12. Glass, G. E., Mérai, A., Molnár, S., & Clayton, P. (2025). The Use of a Proprietary Near-Infrared Laser to Enhance Wound Healing: A Preliminary Preclinical and Clinical Study. *Aesthetic Surgery Journal Open Forum*, *7*, ojaf009.https://doi.org/10.1093/asjof/ojaf009

13. Gusano, D. J. (2024). *Development of novel wound dressing based on elastin-like recombinamers for skin regeneration*. https://doi.org/10.35376/10324/71600

14. Haba, D., Itabashi, M., Tamai, N., Tobe, H., Sanada, H., & Nakagami, G. (2024a). Effectiveness of Vibration Therapy for Hard-to-Heal Wounds in Clinical Study: A Scoping Review. *Chronic Wound Care Management and Research*, *11*, 1–12. https://doi.org/10.2147/cwcmr.s423054

15. Haba, D., Itabashi, M., Tamai, N., Tobe, H., Sanada, H., & Nakagami, G. (2024b). Effectiveness of Vibration Therapy for Hard-to-Heal Wounds in Clinical Study: A Scoping Review. *Chronic Wound Care Management and Research*, *11*, 1–12. https://doi.org/10.2147/cwcmr.s423054

16. Hamblin, M. R. (2017). Mechanisms and applications of the anti-inflammatory effects of photobiomodulation. *AIMS Biophysics, 4*(3), 337–361.

17. Hamblin, M. R. (2018). Photobiomodulation for wound healing: From bench to bedside. *Journal of Clinical and Aesthetic Dermatology, 11*(2), 21–36.

18. Hoffmann, G. (n.d.). *Water-filtered infrared-A (wIRA) in acute and chronic wounds*.

19. IEEE. (2021). *Smart bandage with wireless strain and temperature sensors*. https://ieeexplore.ieee.org/document/9311219

20. Jangra, N., Singla, A., Puri, V., Dheer, D., Chopra, H., Malik, T., & Sharma, A. (2025). Herbal bioactive-loaded biopolymeric formulations for wound healing applications. *RSC Advances*, *15*(16),12402–12442. Royal Society of Chemistry. https://doi.org/10.1039/d4ra08604j

21. Jere, S. W., Houreld, N. N., & Abrahamse, H. (2018). Photobiomodulation at 660 nm stimulates proliferation and migration of diabetic wounded cells via the expression of epidermal growth factor and the JAK/STAT pathway. *Journal of Photochemistry and Photobiology B: Biology*, *179*, 74-83.

22. Kaiser, P., Wächter, J., & Windbergs, M. (2021). Therapy of infected wounds: overcoming clinical challenges by advanced drug delivery systems. *Drug Delivery and Translational Research*, *11*(4), 1545–1567. https://doi.org/10.1007/s13346-021-00932-7

23. Kim, H. J., Jin, Y., Achavananthadith, S., Lin, R., & Ho, J. S. (2021). A wireless optoelectronic skin patch for light delivery and thermal monitoring. *iScience*, *24*(11), 103284 https://doi.org/10.1016/j.isci.2021.103284

24. Li, J., Fu, Y., Zhou, J., Yao, K., Ma, X., Gao, S., Wang, Z., Dai, J.-G., Lei, D., & Yu, X. (2023). *Ultrathin, soft, radiative cooling interfaces for advanced thermal management in skin electronics*. https://www.science.org

25. Mbese, Z., Alven, S., & Aderibigbe, B. A. (2021). Collagen-based nanofibers for skin regeneration and wound dressing applications. *Polymers,13*(24) 4368. https://doi.org/10.3390/polym13244368

26. Mieczkowski, M., Mrozikiewicz-Rakowska, B., Kowara, M., Kleibert, M., & Czupryniak, L. (2022). The Problem of Wound Healing in Diabetes—From Molecular Pathways to the Design of an Animal Model. *International Journal of Molecular Sciences*,*23*(14),7930. https://doi.org/10.3390/ijms23147930

27. Moradifar, F., Sepahdoost, N., Tavakoli, P., & Mirzapoor, A. (2025). Multi-functional dressings for recovery and screenable treatment of wounds: A review. *Heliyon*, *11*(1), e41465.https://doi.org/10.1016/j.heliyon.2024.e41465

28. Nazari, P., Bäuerle, R., Zimmermann, J., Melzer, C., Schwab, C., Smith, A., Kowalsky, W., Aghassi-Hagmann, J., Hernandez-Sosa, G., & Lemmer, U. (2023). Piezoresistive Free-standing Microfiber Strain Sensor for High-resolution Battery Thickness Monitoring. *Advanced Materials*, *35*(21). https://doi.org/10.1002/adma.202212189

29. Patel, A., Patel, R., Patel, R., Prajapati, B., & Jani, S. (2023). Regulatory Perspective: *Human-Machine Interfaces. Human-Machine Interface: Making Healthcare Digital,* 375-410.

30. Patel, S., Ershad, F., Zhao, M., Isseroff, R. R., Duan, B., Zhou, Y., Wang, Y., & Yu, C. (2022). Wearable electronics for skin wound monitoring and healing. *Soft Science*, *2*(2)),13. https://doi.org/10.20517/ss.2022.13

31. Rajendran, N. K., George, B. P., Chandran, R., Tynga, I. M., Houreld, N., & Abrahamse, H. (2019). The influence of light on reactive oxygen species and NF-κB in disease progression. *Antioxidants*,*8*(12), 640.https://doi.org/10.3390/antiox8120640

32. RedInfraHealth. (n.d.). *Heat therapy for better blood flow + circulation*. https://redinfrahealth.com/infrared-light-vein-treatment/

33. Shin, Y.-I., Kim, M.-S., Yang, Y.-A., Jeon, G.-R., Kim, J.-H., Choi, Y.-J., Choi, W.-C., & Kim, J.-H. (2024). The effect of increasing the body's core temperature and improving blood flow by using far-infrared rays. *Biomedicines*, *12*(12), 2922. https://www.mdpi.com/2227-9059/12/12/2922

34. Teixeira, M. A., Paiva, M. C., Amorim, M. T. P., & Felgueiras, H. P. (2020). Electrospun nanocomposites containing cellulose and its derivatives modified with specialized biomolecules for enhanced wound healing. *Nanomaterials*,*10*(3). 557.https://doi.org/10.3390/nano10030557

35. Ullah, I., Komolafe, A., & Beeby, S. (2024). Smart bandage for wound healing with integrated temperature monitoring. *Sensors, 24*(3), 1123. https://www.mdpi.com/1424-8220/24/3/1123

36. Yun Lee, S., Jeon, S., Woo Kwon, Y., Kwon, M., Sung Kang, M., Seong, K.-Y., Park, T.-E., Yun Yang, S., Han, D.-W., Won Hong, S., & Su Kim, K. (2022). Combinatorial wound healing therapy using adhesive nanofibrous membrane equipped with wearable LED patches for photobiomodulation. *Science Advances*,*8*(1). https://www.science.org